# Exploded View — 400 CBAC

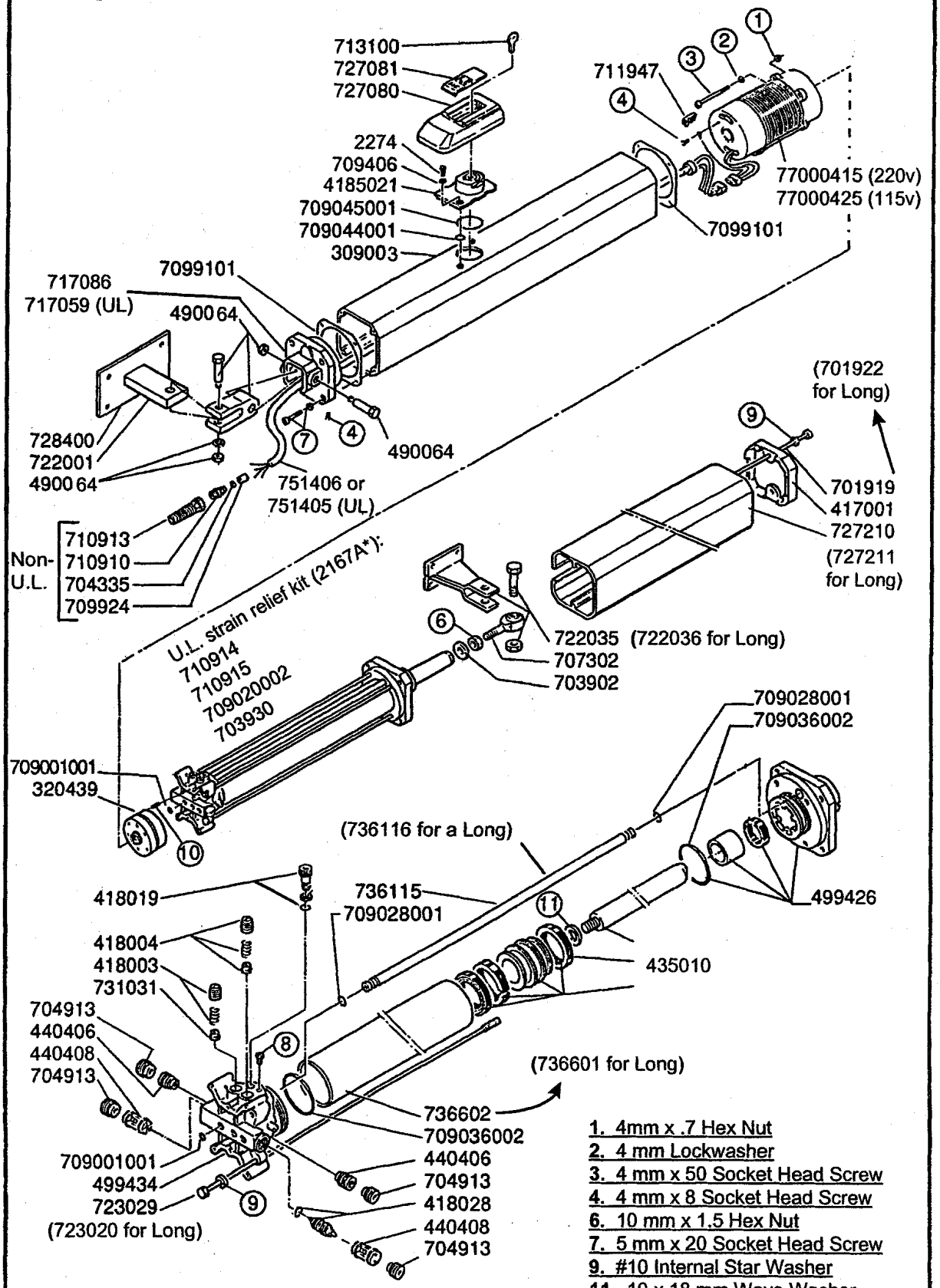


1. 4mm x .7 Hex Nut
2. 4 mm Lockwasher
3. 4 mm x 50 Socket Head Screw
4. 4 mm x 8 Socket Head Screw
6. 10 mm x 1.5 Hex Nut
7. 5 mm x 20 Socket Head Screw
9. #10 Internal Star Washer
11. 10 x 18 mm Wave Washer

**400 Seal Kit Part Number = 2167***

FAAC